THERMASGARD® ALTM 1
THERMASGARD® ALTM 2

Surface contact/tube contact temperature measuring transducers, including strap, calibrateable, with multi-range switching and active output

S+S REGELTECHNIK

Calibrateable tube contact temperature measuring transducers THERMASGARD® ALTM with eight switchable measuring ranges, internal or remote sensor, continuous output, strap and terminal box enclosure made of impact-resistant plastic, enclosure cover with quick-locking screws, optional with or without display. This surface contact feeler is used for temperature detection on piping and tubes (e.g. coldwater and hot-water), or on heating sections for heating system control. The tube sensors are factory-calibrated. Adjustment/fine adjustment by the user is possible (range and zero point are adjustable).

ALTM 1
(compact)

ALTM 2
(with remote sensor)

TECHNICAL DATA:

Power supply:	24 V AC/DC ±10% for output 0-10 V 15-36 V DC for output 4...20 mA (depending on working resistance)
Sensor:	Pt1000, DIN EN 60751, class B
Measuring ranges:	**multi-range switching** **with 8 switchable measuring ranges,** see table (other ranges optional) ALTM 1 (compact variant): **T_{max} up to 100°C**, operating range -50...+100 °C ALTM 2 (remote variant): **T_{max} over 100°C**, operating range -50...+150 °C **with manual zero point correction (± 10 K)**
Output:	0-10 V or 4...20 mA
Ambient temperature:	measuring transducer -30...+70 °C
Connection type:	2- or 3-wire connection
Process connection:	endless metal strap and metal tightener (included in the scope of delivery)
Strap dimensions:	Ø = 13-92 mm (1/4-3"), length L = 300 mm
Connecting head:	plastic, material polyamide, 30% glass-globe-reinforced, **with quick-locking screws,** colour pure white (similar RAL 9010)
Dimensions:	72 x 64 x 39.4 mm
Cable gland:	M 16, including strain relief
Connecting cable: (ALTM 2 only)	silicone, 1.5 m, SiHF, 2 x 0.25 mm², ends stripped, with wire end sleeves (optional Teflon up to 250 °C or glass fibre with steel wire mesh up to 350 °C)
Electrical connection:	0.14-1.5 mm² via terminal screws
Insulating resistance:	≥ 100 MΩ, at 20 °C (500 V DC)
Humidity:	< 95% r.H., non-precipitating air
Protection class:	III (according to EN 60730)
Protection type:	**IP 65** (according to EN 60529)
Standards:	CE conformity, electromagnetic compatibility according to EN 61326:2006, according to EMC directive 2004/108/EC
Optional:	single-line display with illumination, cutout 37 x 15 mm (W x H), for displaying actual temperature

Connection*:
2-wire connection for devices with/without display (not illuminated)
3-wire connection for devices with illuminated display

3-wire connection **ALTM-U**

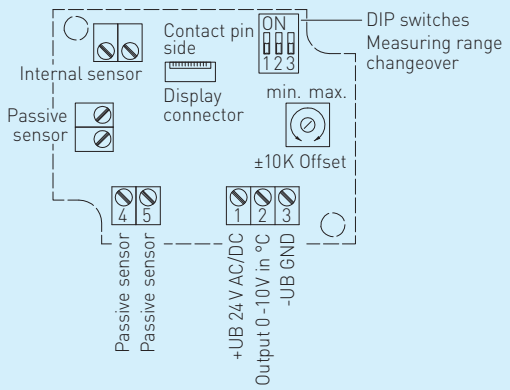

2- or 3-wire connection** **ALTM-I**

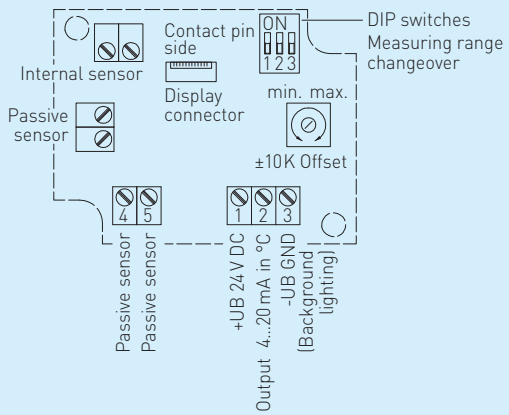

Dimensional drawing **ALTM 1**

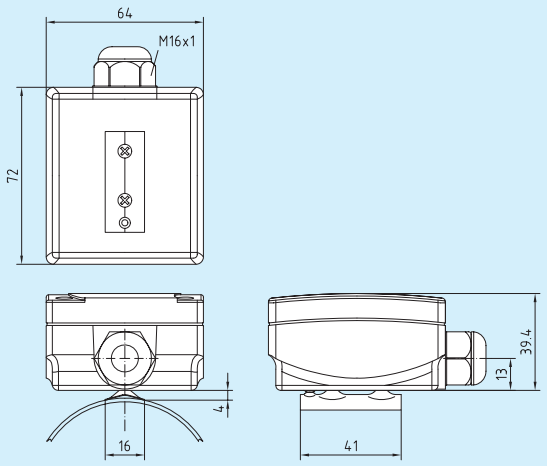

ALTM 1
with display
(compact)

ALTM 2
with display
(with remote sensor)

Dimensional drawing **ALTM 2**

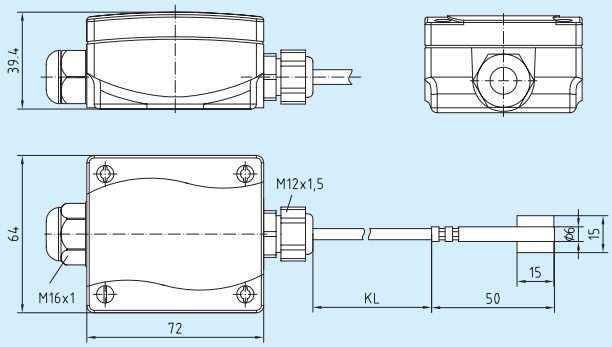

Measuring ranges (adjustable)	DIP 1	DIP 2	DIP 3
-20 °C ... + 150 °C	**ON**	**ON**	**ON**
-50 °C ... + 50 °C	OFF	**ON**	**ON**
-20 °C ... + 80 °C	**ON**	OFF	**ON**
-30 °C ... + 60 °C	OFF	OFF	**ON**
0 °C ... + 40 °C	**ON**	**ON**	OFF
0 °C ... + 50 °C	OFF	**ON**	OFF
0 °C ... + 100 °C	**ON**	OFF	OFF
0 °C ... + 150 °C	OFF	OFF	OFF

Dependency of output voltage on output current

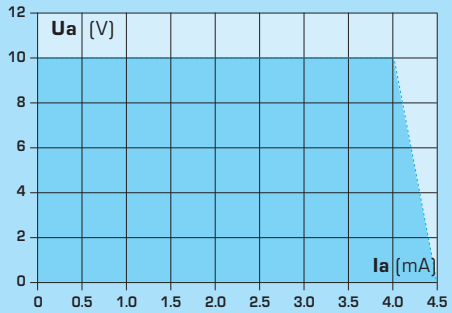

THERMASGARD® **ALTM 1** and **ALTM 2**, including strap

Type / WG1	Sensor	Output	Model
ALTM 1-I	Pt 1000	4...20 mA	Compact
ALTM 1-U	Pt 1000	0 -10 V	Compact
ALTM 2-I	Pt1000	4...20 mA	Remote sensor
ALTM 2-U	Pt1000	0 -10 V	Remote sensor
ALTM - xx - Display	Single-line display with illumination		
Optional:	Other measuring ranges on request.		
Extra charge:	2-wire connecting leads (silicone) per running meter Humidity-tight compound-filled (IP 68)		
Accessories:	Heat-conductive paste, set		