Pendulum room temperature measuring transducers, calibrateable, with multi-range switching and active output

S+S REGELTECHNIK

Calibrateable resistance thermometer THERMASGARD® RPTM 2 with eight switch-able measuring ranges, continuous output, terminal box enclosure made of impact-resistant plastic and enclosure cover with quick-locking screws. This room pendulum sensor is specifically designed for temperature detection in larger rooms and halls, as dark radiation sensor for example. Due to the measuring method employed by this pendulum room temperature sensor in combination with its positioning in the room, an excellent and room-representative measuring result is achieved. The globe thermometer THERMASGARD® RPTM 2 determines the effective portion of active radiation or the effective radiant heat at the measured location. The globe temperature is determined to take heat radiation into consideration and to estimate thermal comfortableness (operative room temperature). The operative room temperature describes the coaction of heat radiation and heat convection (the ratio of globe temperature / air temperature is ca. 70 % / 30 %). These sensors are factory-calibrated. Adjustment / fine adjustment by the user is possible (range and zero point are adjustable).

RPTM 2

TECHNICAL DATA:

Power supply:	24 V AC / DC ± 10 % for output 0 - 10 V 15 - 36 V DC for output 4 ... 20 mA (depending on working resistance)
Sensor:	Pt1000, DIN EN 60751, class B
Measuring ranges:	**multi-range switching** **with 8 switchable measuring ranges,** **5 measuring ranges usable,** see table (other ranges optional) T_{min} -50 °C, T_{max} +80 °C **with manual zero point correction (± 10 K)**
Output:	0 - 10 V or 4 ... 20 mA
Ambient temperature:	measuring transducer -30...+70 °C
Connection type:	2- or 3-wire connection
Globe:	plastic, colour black, Ø = 50 mm
Sensor cable:	PVC; LiYY, 1.5 m (other lengths optional: e. g. 3 m, 6 m)
Enclosure:	plastic, material polyamide, 30 % glass-globe-reinforced, **with quick-locking screws,** colour pure white (similar RAL 9010)
Dimensions:	72 x 64 x 39.4 mm
Electrical connection:	0.14 - 1,5mm², via terminal screws
Cable gland:	M 16, including strain relief
Humidity:	< 95 % r. H., non-precipitating air
Protection class:	III (according to EN 60 730)
Protection type:	**IP 65** (according to EN 60 529)
Standards:	CE conformity, electromagnetic compatibility according to EN 61326: 2006, according to EMC directive 2004 / 108 / EC

Connection*:
2-wire connection for devices with / without display (not illuminated)
3-wire connection for devices with illuminated display

3-wire connection

RPTM-U

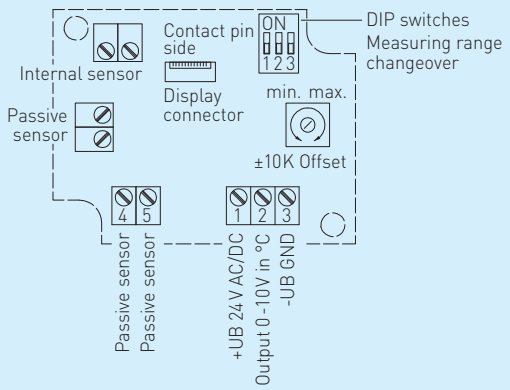

2- or 3-wire connection*

RPTM-I

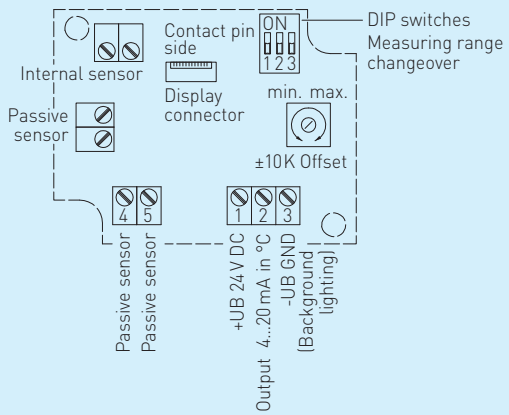

Dimensional drawing **RPTM 2**

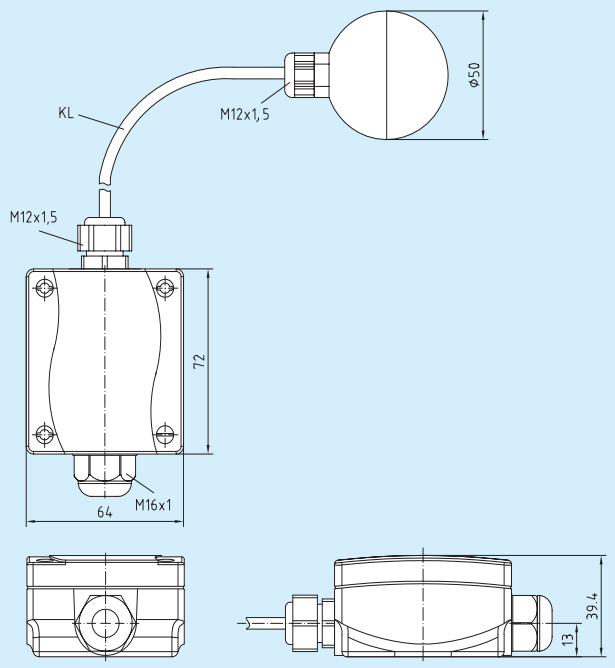

Measuring ranges (adjustable)	DIP 1	DIP 2	DIP 3
-20 °C ... + 150 °C	**ON**	**ON**	**ON**
-50 °C ... + 50 °C	OFF	**ON**	**ON**
-20 °C ... + 80 °C	**ON**	OFF	**ON**
-30 °C ... + 60 °C	OFF	OFF	**ON**
0 °C ... + 40 °C	**ON**	**ON**	OFF
0 °C ... + 50 °C	OFF	**ON**	OFF
0 °C ... + 100 °C	**ON**	OFF	OFF
0 °C ... + 150 °C	OFF	OFF	OFF

Dependency of output voltage on output current

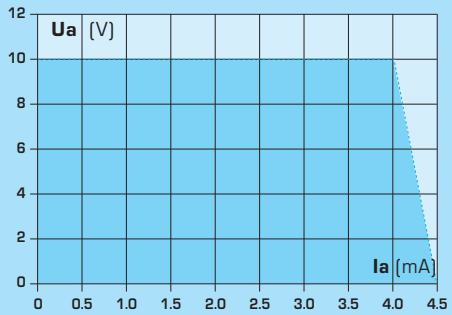

THERMASGARD® **RPTM 2** (with globe)

Type / WG1	Sensor	Output
RPTM 2 - I	Pt 1000 (DIN EN 60751, class B)	4...20 mA
RPTM 2-U	Pt 1000 (DIN EN 60751, class B)	0-10 V
Optional:	Other measuring ranges on request.	
Please specify in your order:	Type and length of sensor cable e.g. RPTM2-U, 3 m; RPTM2-I, 6 m	